VOLVO

UX AT 108 KM/H

How we use principles at Volvo Car UX, and how you can, too

DESIGN MATTERS 2024 TOKYO

WHO ARE YOU?
WHO AM I?

DESIGN IS:

practiced by and for humans / conscious and intuitive / a method / a relational process / individual and collective / driven by purpose / capable of solving challenges / intent on creating or improving conditions /
an outcome / able to bring clarity or order /
a means of understanding / problem-solving / value-adding / and more

VOLVO

VOLVO

POT 559

VOLVO

DESIGN MATTERS 2024 TOKYO

VOLVO

LET ME GET NERDY FOR A MOMENT...

VOLVO

VOLVO

Freedom to move in a personal, sustainable and safe way.

DESIGN MATTERS 2024 TOKYO

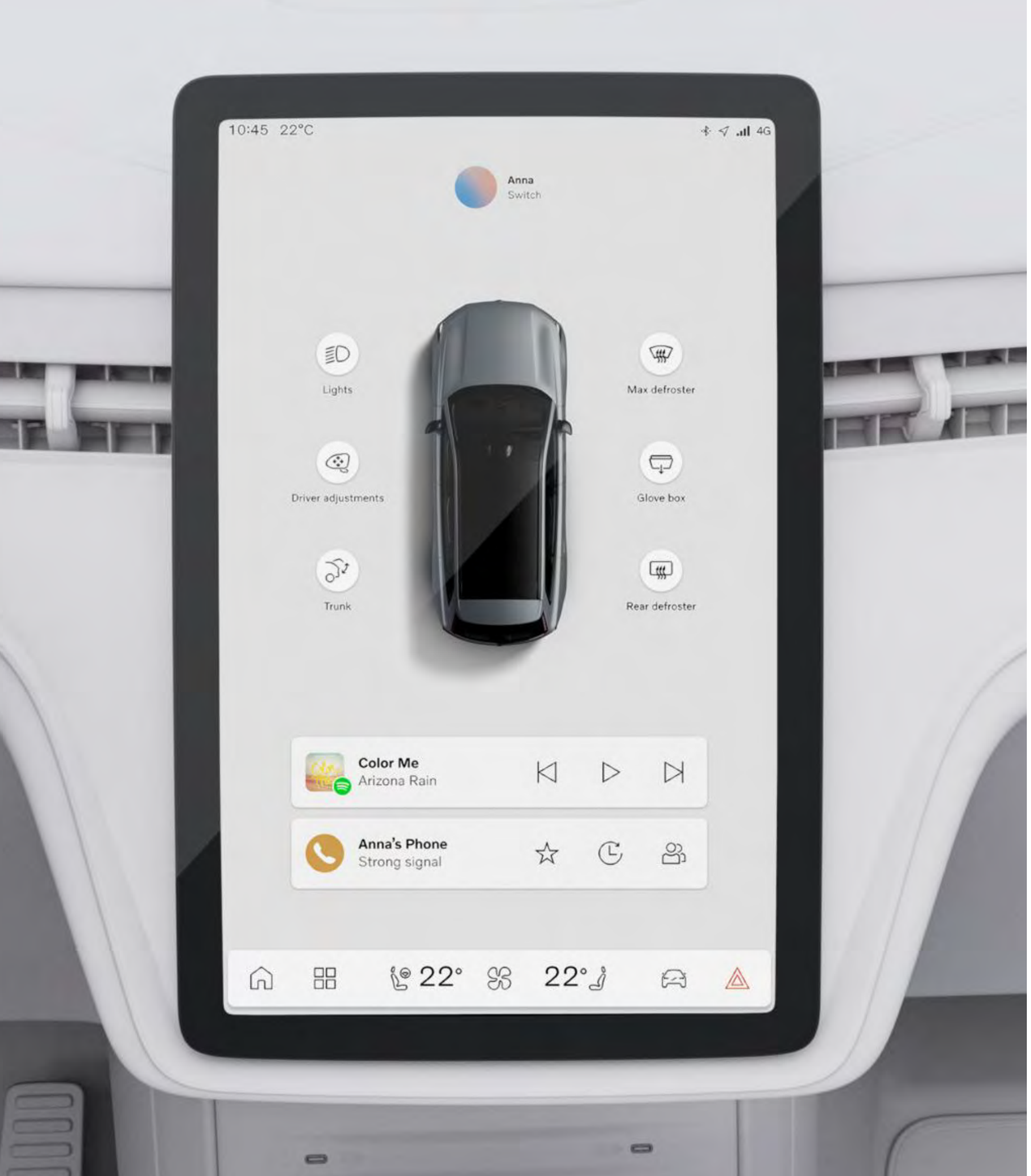

VOLVO

PERSONAL

By and for people (in process and outcomes)

Personalizable and customizable experiences

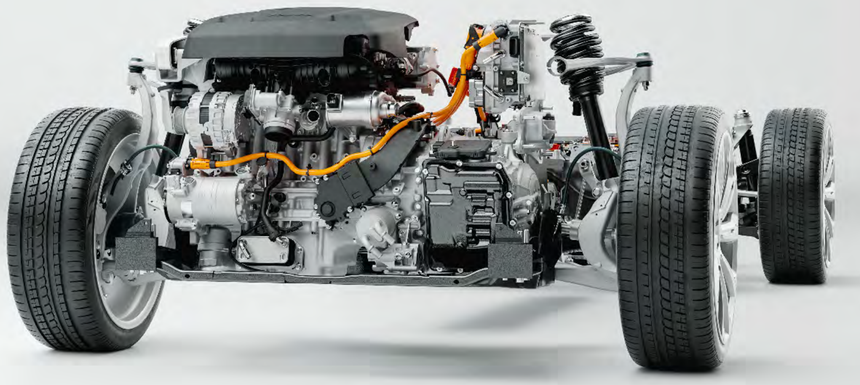

SUSTAINABLE

2030: Fully electric
2040: Climate neutral

Innovating to reduce
emissions in production

VOLVO

SAFE

“Trygghet”
cultural value and human right

Perceived and
experienced safety

VOLVO

CAR...UX?

Our mission and focus

VOLVO

UX is often found here

...also commonly here.

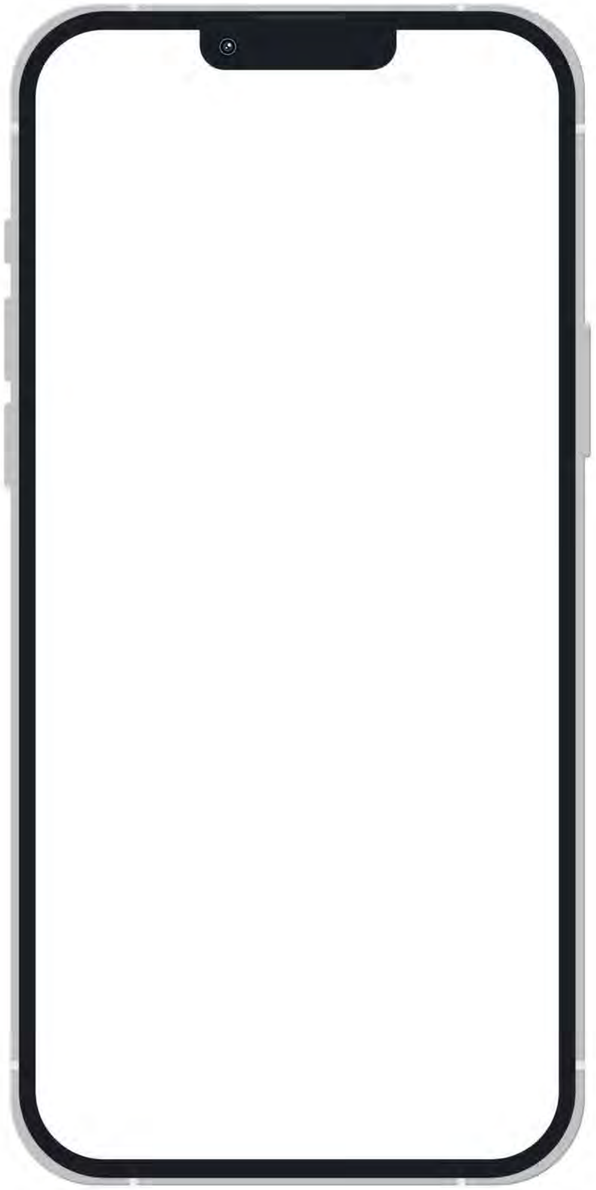

Our context starts here, inside of the car

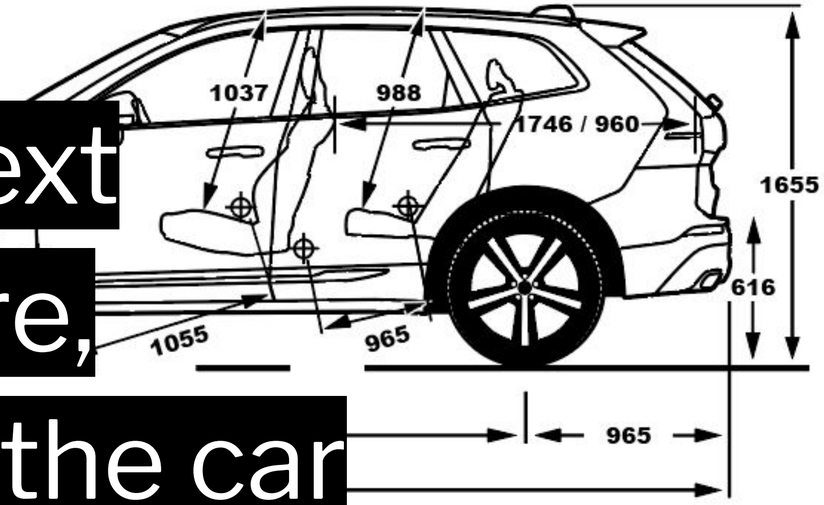

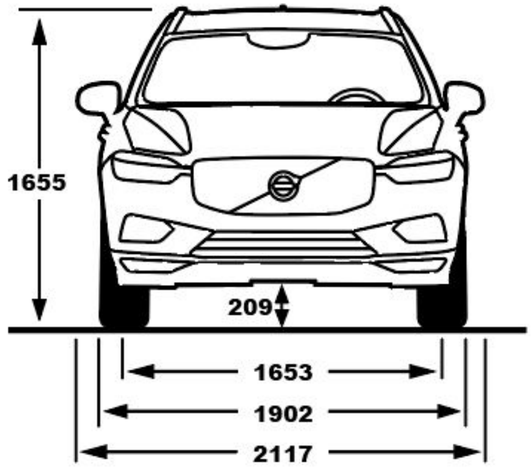

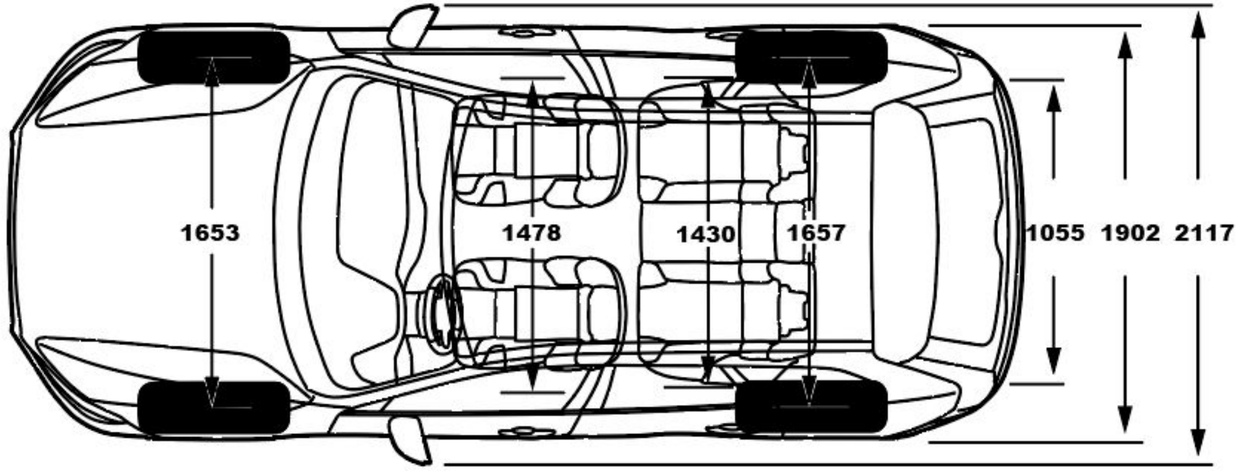

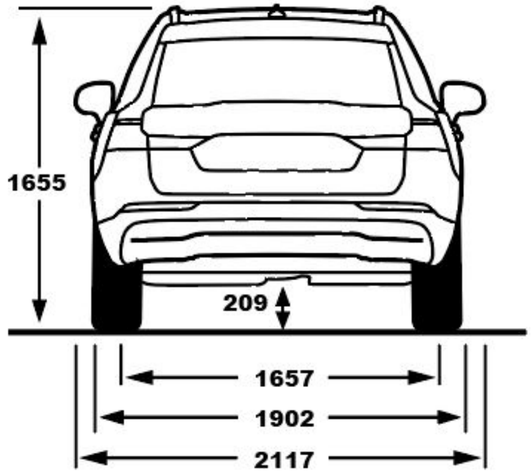

In touchpoints like these...

VOLVO

...and this, while driving 108km/h.

VOLVO
For people
inside of the car
DESIGN MATTERS 2024 TOKYO

VOLVO
...and around the car,
around the world.
DESIGN MATTERS 2024 TOKYO

VOLVO

For life,
lives and living.

DESIGN MATTERS 2024 TOKYO

CAR UX

Our mission is to design user experiences* inside of and immediately adjacent to the car that are personal, sustainable, and safe.

*often, but not always digital

When hardware is evolving

VOLVO

When software is evolving

DESIGN MATTERS 2024 TOKYO

VOLVO

How do ensure we deliver on our values in the UX we design for our cars?

VOLVO

CAR UX PRINCIPLES

The foundation of our experiences

1.Design for safe display of information

VOLVO

1. Design for safe display of information
2. Design for behavioral continuity

VOLVO

1. Design for safe display of information
2. Design for behavioral continuity
3. Design for reusable knowledge

VOLVO

1. Design for safe display of information
2. Design for behavioral continuity
3. Design for reusable knowledge
4. Design for accessibility and inclusivity

VOLVO

1.
Design for safe display of information

VOLVO
Failure is a
serious matter.
DESIGN MATTERS 2024 TOKYO

DESIGN MATTERS 2024 TOKYO

110
108
km/h
300m

50
0
km/h
488km
90%
P
R
N
D
VOLVO
10:45 22°C
Search
Home
16 min · 4.6 km
59%
Work
5 min · 1.1 km
69%
Color Me
Arizona Rain
Anna's Phone
Strong signal
Assistant
Range
Camera
Defrost
22°
22°

VOLVO

How’s it relevant for my team?

Design for detailed analysis of information

VOLVO

Design for quickest action possible based on information

VOLVO

Design for

of _____

VOLVO

1.
Design for safe display of information

Driver, driving is proritized user and use case

VOLVO

2. Design for behavioral continuity

VOLVO

DESIGN MATTERS 2024 TOKYO

DESIGN MATTERS 2024 TOKYO

DESIGN MATTERS 2024 TOKYO

VOLVO

VOLVO

How’s it relevant for my team?

HMW pick up the experience where the user left last time?

HMW evolve the experience across touchpoints and time scales?

VOLVO

2.
Design for behavioral continuity

Journey-based perspectives (user and product)

VOLVO

3.
Design for reusable knowledge

DESIGN MATTERS 2024 TOKYO

Who's watching?

Ben

Susan

Test

claire

Add Profile

MANAGE PROFILES

VOLVO

How’s it relevant for my team?

HMW ~~steal~~ utilize relevant models, frameworks or interactions humans already understand?

VOLVO

3.
Design for reusable knowledge

Avoid novelty that lacks intention or purpose

VOLVO

4.
Design for accessibility and inclusivity

DESIGN MATTERS 2024 TOKYO

DESIGN MATTERS 2024 TOKYO

VOLVO

How’s it relevant for my team?

HMW consider taking an experience compromise to **protect our user(s)?**

HMW consider taking an experience compromise to **enable easier usage?**

HMW consider taking an experience compromise to **expand inclusion?**

VOLVO

4.
Design for accessibility and inclusivity

Compromises can be necessary

VOLVO

1. Design for safe display of information
2. Design for behavioral continuity
3. Design for reusable knowledge
4. Design for accessibility and inclusivity

VOLVO

TO CONCLUDE

Why principles matter, for us

In our world, failure can be high stakes

VOLVO

Aligned with brand

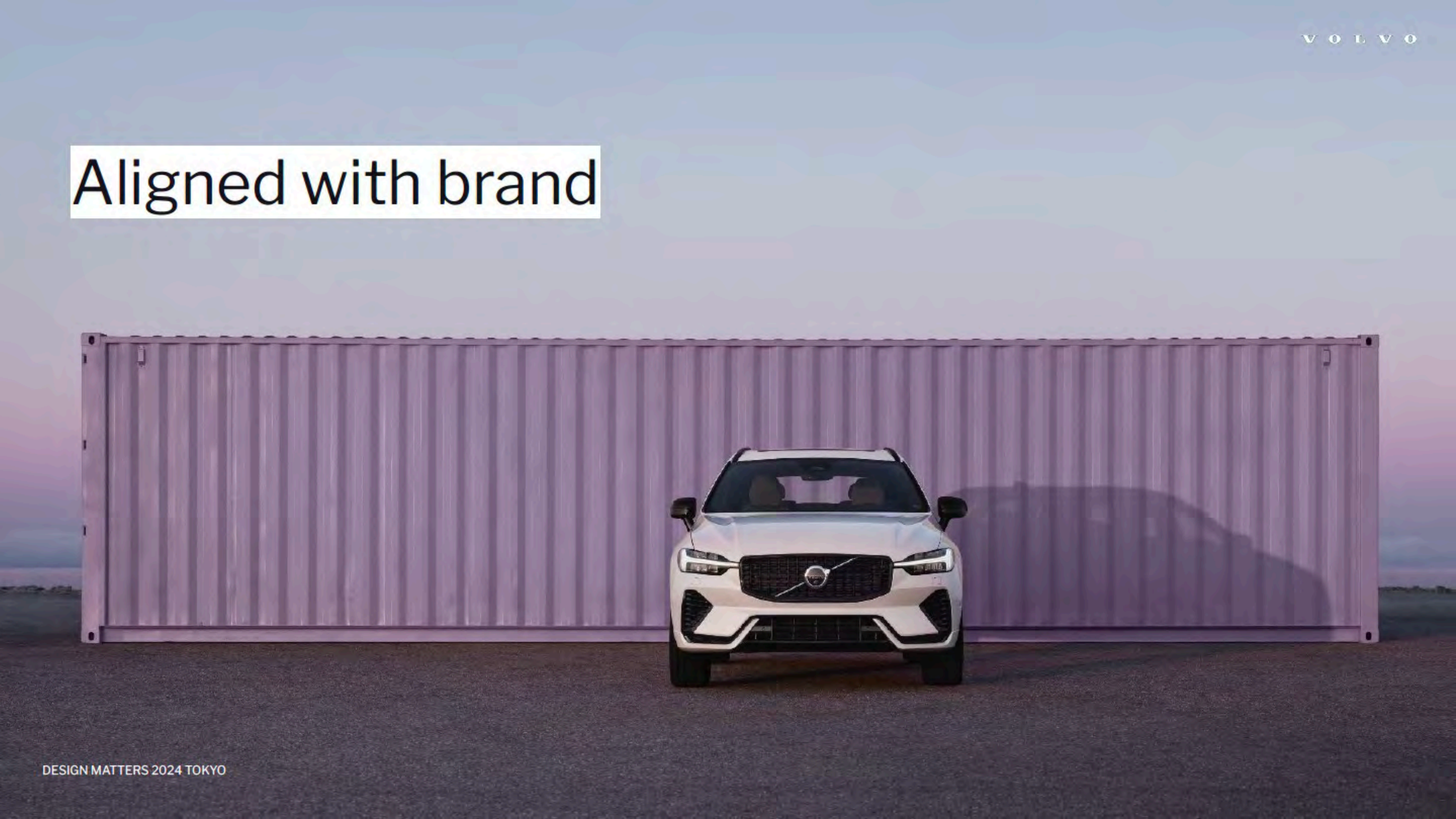

VOLVO

Aligned with brand
Tech-enabled

VOLVO

Aligned with brand
Tech-enabled
Humane and human-centric

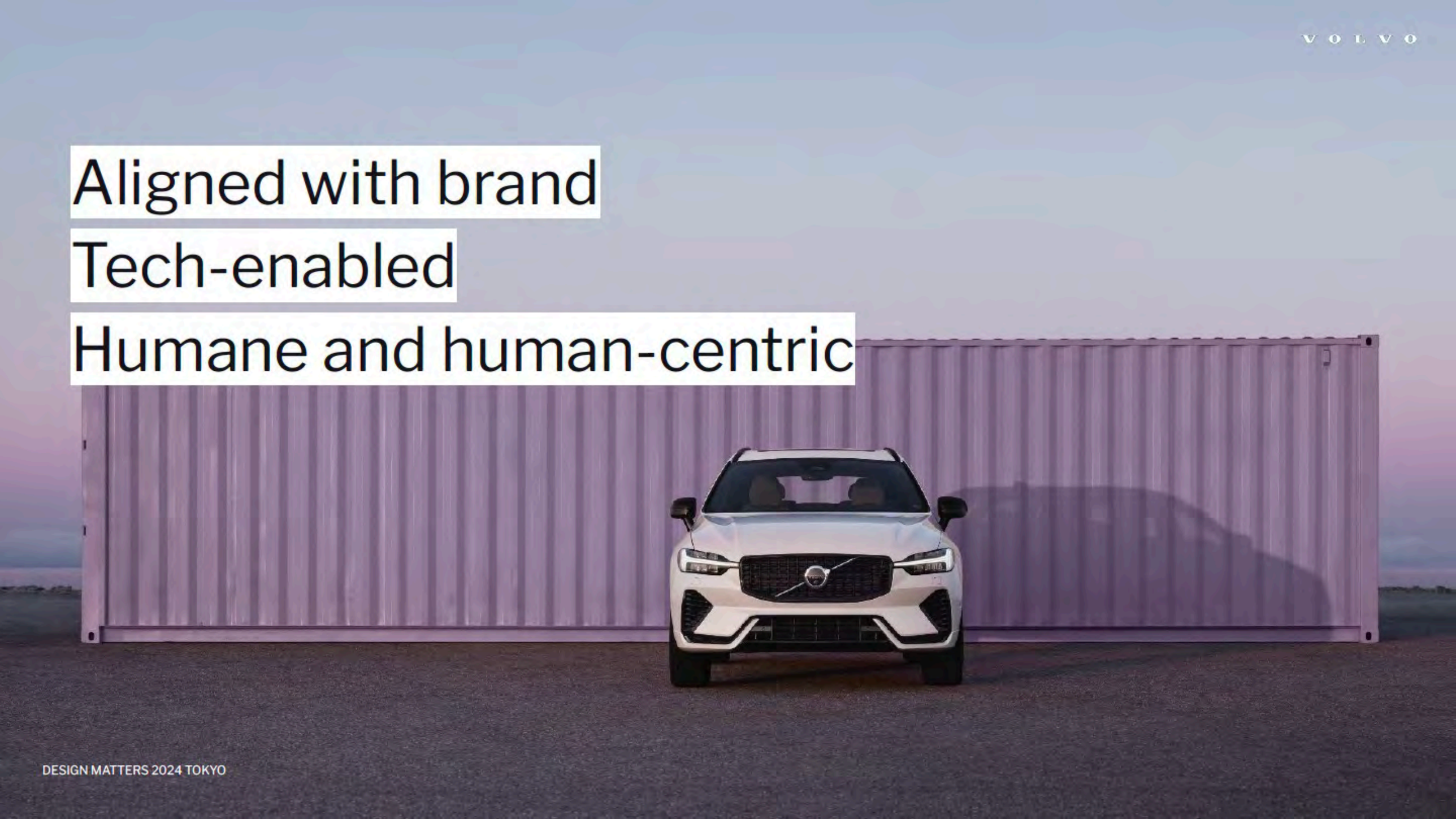

VOLVO

Principles don’t solve the problem - but they give parameters to work with and measure solutions against.

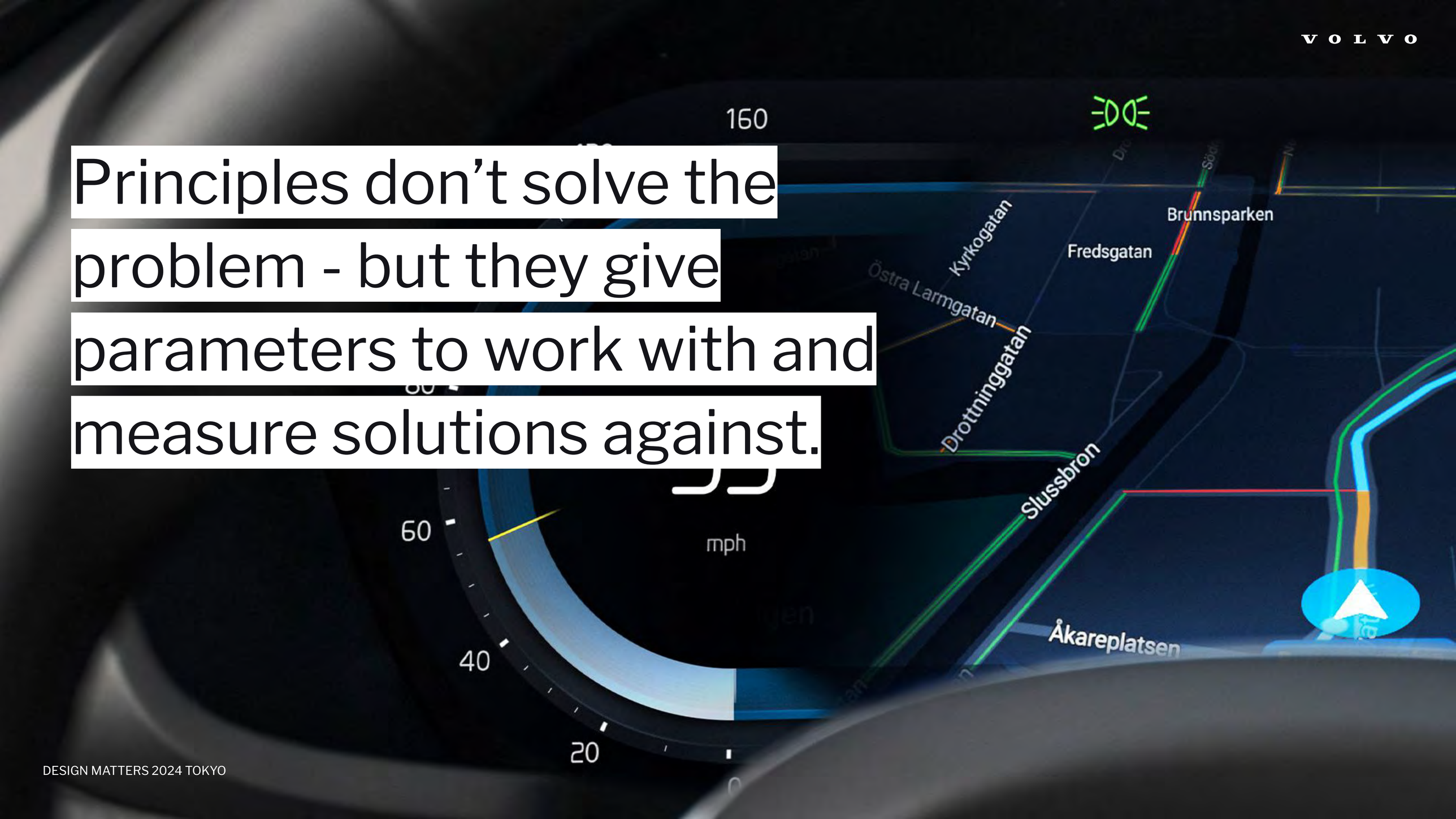

VOLVO

THANK YOU

Lindsay Tingstrom

Car UX Design Manager, Volvo Cars